DEXDO Yihui Casting®

Mini Induction Melting Furnace

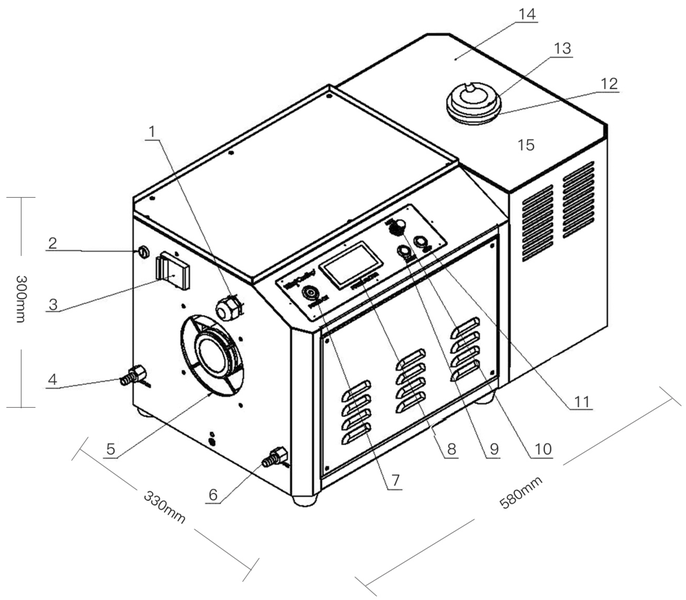

① Power line ② Fuse ③ Main power switch
④ Water in ⑤ Cooling fan ⑥ Water out
⑦ Power switch ⑧ Power factor display
⑨ Start button ⑩ Power adjustment knob
⑪ Stop button ⑫ Ceramic insulation ⑬ Crucible
⑭ Melting chamber ⑮ Cover plate (Ceramic Flange, Mica Plate, Aluminum Plate)

Model	Z.M.MF.ML001	Z.M.MF.ML002
Input Required Grid	230 V,50 Hz	230 V,50 Hz
Output Power	3 kW	5 kW
Suitable Metals	Gold, Silver, Brass etc.	
Melting Capacity	1 kg Gold	2 kg Gold
Melting Time	3–5 Minutes	
Max. Temperature	1.350 ℃	1.350 ℃
Water cooling	Water tap / water chiller / water tank	
Outline Size	580x330x300 mm^3	
Net Weight	28 kg	

Compact body design, small and can be placed on a workbench for use. Convenient to carry in the car trunk

The cost for each melting cycle can be held below 3,50 euros(calculated based on 2023 German electricity prices).

Melting chamber covered by mica plate and replacable ceramic flange ensure the best work safety and convenience

Suitable for melting precious metals with a volume of less than 2kg; the crucible can reach a temperature of 1.100°C within 3-5 minutes (maximum temperature of 1.350°C, not exceeding 3 minutes each melting cycle).

PARTNERS

AFARAK · WINNEN METALL Schmelzwerk | Großhandel | Recycling · CILOR TRAURINGE · MONTAN UNIVERSITÄT · TUM TECHNISCHE UNIVERSITÄT MÜNCHEN · VAIBHAV GLOBAL LIMITED · TRAUSCHMUCK SPERLING · Schwarz Die Form der Liebe Familienbetrieb seit 1932 · Meister Kabelrecycling · LUXOTTICA

DEXDO UG (haftungsbeschränkt)
Winchester Str. 2, 35394 Gießen, Germany,
Commercial Register: Gießen District Court, HRB 9240
E-Mail: kundendienst@dexdo-casting.de Tel.: +49 (0) 641 1327 3268

Manufactured in China by Yihui Casting Technology Co., Ltd

DEXDO DECIDE & DO!

MINI INDUCTION MELTING FURNACE

https://dexdo-casting.de/