2-8 kg Medium-Frequency Induction Furnace

Knob for analog signal control ensures quick response and work safety, improving convenience and efficiency.

Optimized insulation with mica and ceramic flanges ensures safety during work.

Real-time monitoring of crucible surface temperature using a K-type temperature probe for precise smelting.

6 sensors (water temperature, water pressure, current, voltage, phase, smelting temperature) prevent operational errors and unnecessary losses.

Crucible reaches 1200 degrees Celsius within 5 minutes (Short-term Max Temp: 1350°C).

Each smelting operation costs under 3.5 euros (based on 2023 German electricity prices).

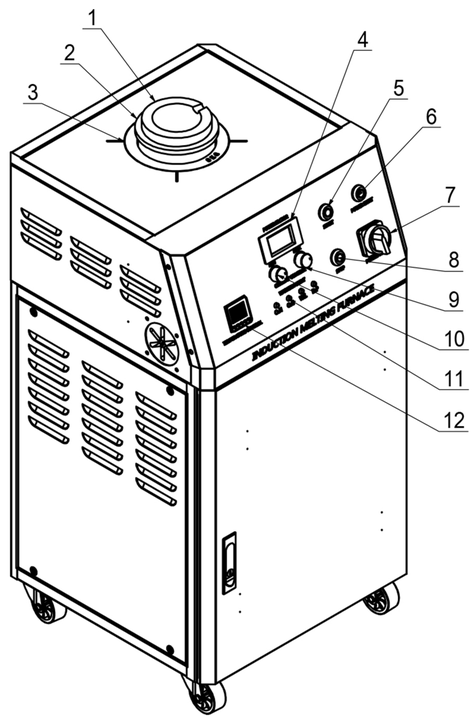

① Graphite crucible
② Ceramic Shied
③ Quartz cover flange
④ Power Gauge
⑤ Start key
⑥ Power indicator light
⑦ Power Switch
⑧ Stop key
⑨ Increase power
⑩ Reduce power
⑪ Warning lamp
⑫ Temperature control meter

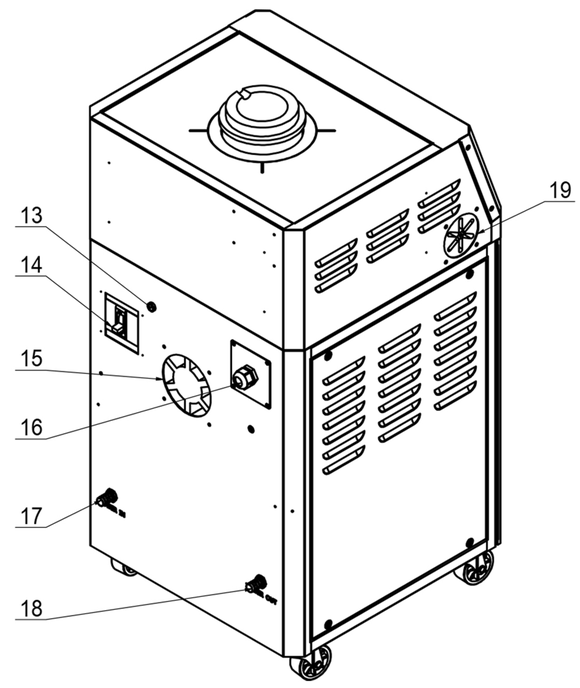

⑬ Safety device
⑭ Air Switch
⑮ Air cooling system
⑯ Power line
⑰ Water outlet interface
⑱ Water outlet interface
⑲ Air cooling system

Model	Description	Voltage	Frequency	Phase	Power input	Weight	Size
Z.M.MF.00002	2 kg melting furnace	400V±10%	50 Hz	3	5/10 kW	80 kg	500x500x950
Z.M.MF.00003	3 kg melting furnace	400V±10%	50 Hz	3	5/10 kW	80 kg	500x500x950
Z.M.MF.00004	4 kg melting furnace	400V±10%	50 Hz	3	5/12 kW	80 kg	500x500x950
Z.M.MF.00005	2 kg melting furnace	400V±10%	50 Hz	3	5/12 kW	80 kg	500x500x950
Z.M.MF.00006	3 kg melting furnace	400V±10%	50 Hz	3	8/15 kW	80 kg	500x500x950
Z.M.MF.00008	4 kg melting furnace	400V±10%	50 Hz	3	8/15 kW	80 kg	500x500x950

PARTNERS
AFARAK
WINNEN METALL Schmelzwerk | Großhandel | Recycling
CILOR TRAURINGE
MONTAN UNIVERSITÄT
TUM TECHNISCHE UNIVERSITÄT MÜNCHEN
VAIBHAV GLOBAL LIMITED
TRAUSCHMUCK SPERLING
Schwarz Die Form der Liebe Familienbetrieb seit 1932
Meister Kabelrecycling
LUXOTTICA

DEXDO UG (haftungsbeschränkt)
Winchester Str. 2, 35394 Gießen, Germany,
Commercial Register: Gießen District Court, HRB 9240
E-Mail: kundendienst@dexdo-casting.de Tel.: +49 (0) 641 1327 3268

Manufactured in China by Yihui Casting Technology Co., Ltd

INDUCTION MELTING FURNACE

https://dexdo-casting.de/

DEXDO DECIDE & DO!

Crucible Accessories

IPHPG Crucible
(Isostatically Pressed High Purity Graphite Crucible)

Model	Gold melting volume	Size (mm)				Weight
		Φ1	Φ2	Φ3	H	
G.GM.2000A	2 kg	65	44	57	110	240g
G.GM.3000A	3 kg	85	60	75	105	390g
G.GM.4000A	4 kg	85	60	76	131	470g
G.GM.5000A	5 kg	100	69	88	131	640g
G.GM.6000A	6 kg	115	79	97	178	1000g
G.GM.8000A	8 kg	115	84	105	177	1870g

Our products are suitable for the melting of gold, silver, copper or their alloys.
The main features of our products are high purity, high density, high temperature resistance and good oxidation resistance.

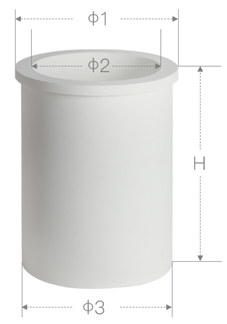

HPQC Crucible Sets
(High Purity Quartz Ceramic Crucible Sets)

Model	For crucible model	Size (mm)				Weight
		Φ1	Φ2	Φ3	H	
C.CC.2000A	G.GM.2000A	84	61	70	112	265g
C.CC.3000A	G.GM.3000A	97	89	79	103	324g
C.CC.4000A	G.GM.4000A	100	90	80	132	392g
C.CC.5000A	G.GM.5000A	118	102	92	135	693g
C.CC.6000A	G.GM.6000A	127	115	100	178	822g
C.CC.8000A	G.GM.8000A	147	136	116	185	1448g

With SiO2 (silicon dioxide) approaching to 100%. For certain laboratory and industrial applications, high purity quartz ceramic sets can operate stably within a mid-temperature range of 500 degrees Celsius to 1600 degrees Celsius.

DEXDO UG (haftungsbeschränkt)
Winchester Str. 2, 35394 Gießen, Germany,
Commercial Register: Gießen District Court, HRB 9240
E-Mail: kundendienst@dexdo-casting.de Tel.: +49 (0) 641 1327 3268
Manufactured in China by Yihui Casting Technology Co., Ltd